EC1204B Component List Ver:1.2

Item	Component type	Components Bit No.	Details Specification	Qty	Remark
1	51MCU	U1	AT89S52(STC89C52)，DIP-40	1	
2	DIP Socket	U1	40 PIN，DIP Holder	1	
3	1302	U2	DS1302，DIP-8	1	
4	DIP Socket	U2	8 PIN，DIP holder	1	
5	crystal oscillator	Y1	12MHz crystal oscillator	1	
6	crystal oscillator	Y2	32.768KHz crystal oscillator	1	
7	USB famale interface	miniUSB	miniUSB 180°Straight socket	1	
8	switch	MODE，PLUS，RST	4-pin DIP switch	3	
9	buzzer	SPEAKER	buzzer	1	
10	Four bit digital tube	DS1	0.56 four Bits AS clock digital tube，Two lines 12PIN	1	
11	CR2032 battery	BT1	CR2032 3V Button battery	1	
12	CR2032 battery holder	BT1	CR2032 Button battery holder	1	
13	6PIN Pins	S51_DN	6PIN 2.54 Single needle	1	
14	PNP Transistor	Q1, Q2, Q3, Q4, Q5, Q6, Q7, Q8, Q9, Q10, Q11, Q12, Q13	8550 PNP Transistor	13	
15	Red LED	D5*,D10*,D15*, D20*,D25*,D30*, D35*,D40*,D45*, D50*, D55*,D60*	3mm Red LED，DIP	12	
16	green LED	D1~D4，D6~D9，D11~D14，D16~D19，D21~D24，D26~D29，D31~D34，D36~D39，D41~D44，D46~D49，D51~D54，D56~D59	3mm Green LED，DIP	48	
17	resister	R1,R2,R3,R4,R6,R12, R14,R16,R18,R20, R21,R26,R29,R31,R32, R33, R34, R35	0805 chip resister，10K	15	
18	resister	R5,R7,R8,R9,R10, R11,R13,R15,R17, R19,R25,R30,R27	0805 chip resister，47 Ohm	13	
19	Cap	C3，C4,C6,C7	0805 chip capacitor，20pF	4	
20	Cap	C2, C5	0805 chip capacitor，104	1	
21	Cap	C1	100uF electrolytic capacitor，16V，DIP	1	
22	electronic board	EC1204B v1.0	EC1204B v1.0 Board	1	
23	Copper cylinder screw		The pillars screws and nuts	4	
24	DS18B20	18B20	DS18B20 temperature sensor	1	
25	6pins flat cable	---	20cm 6 PinsISP download flat cable	1	

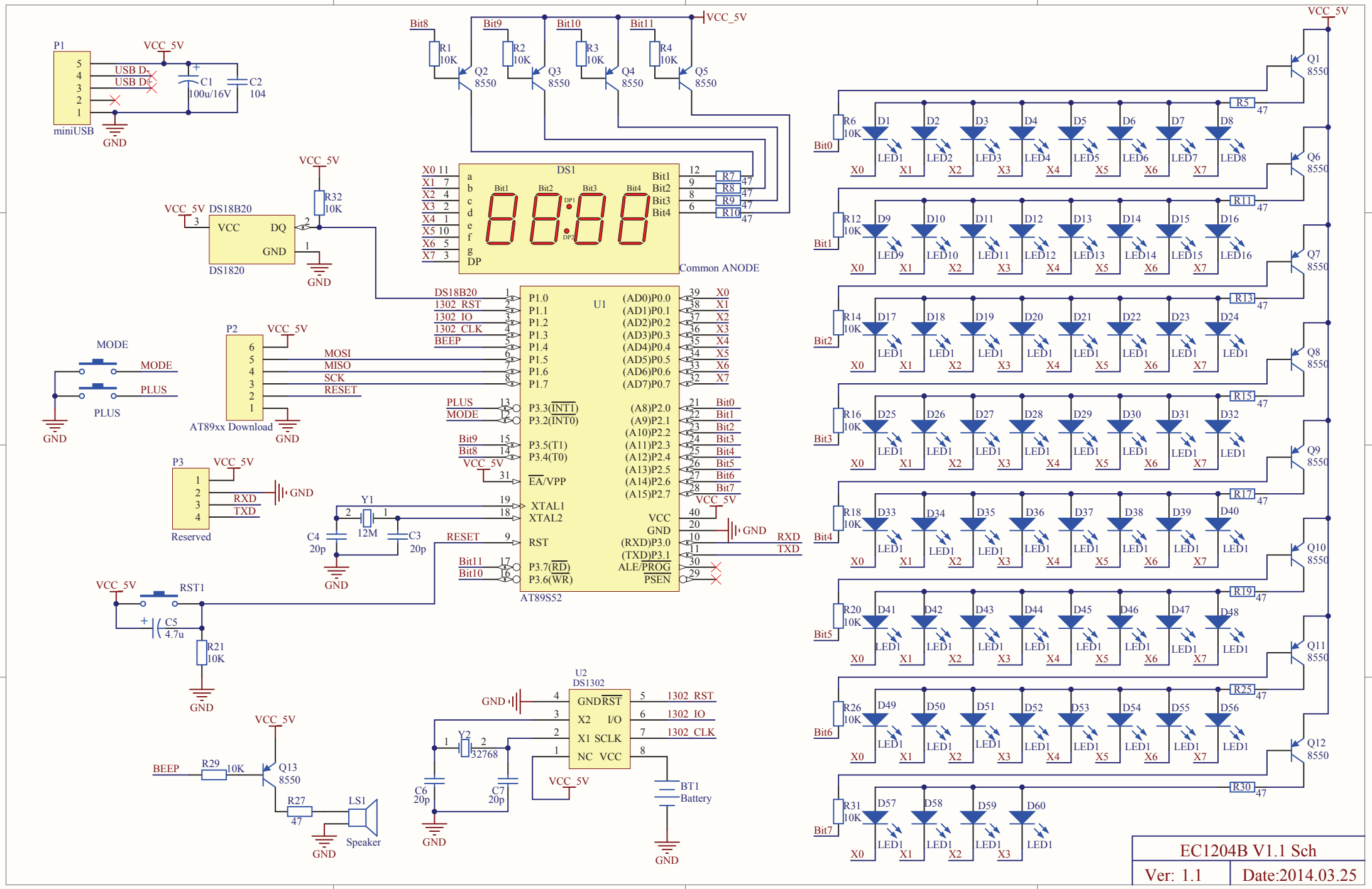
P1
miniUSB
USB D-
USB D+
VCC_5V
C1
100u/16V
C2
104
GND
Bit8
Bit9
Bit10
Bit11
R1
10K
R2
10K
R3
10K
R4
10K
Q2
8550
Q3
8550
Q4
8550
Q5
8550
DS1
Common ANODE
R7
R8
R9
R10
R32
10K
DS18B20
DS1820
VCC
DQ
GND
P2
AT89xx Download
MOSI
MISO
SCK
RESET
MODE
PLUS
P3
Reserved
RXD
TXD
Y1
12M
C3
20p
C4
20p
RST1
C5
4.7u
R21
10K
U1
AT89S52
P1.0
P1.1
P1.2
P1.3
P1.4
P1.5
P1.6
P1.7
P3.3(INT1)
P3.2(INT0)
P3.5(T1)
P3.4(T0)
EA/VPP
XTAL1
XTAL2
RST
P3.7(RD)
P3.6(WR)
(AD0)P0.0
(AD1)P0.1
(AD2)P0.2
(AD3)P0.3
(AD4)P0.4
(AD5)P0.5
(AD6)P0.6
(AD7)P0.7
(A8)P2.0
(A9)P2.1
(A10)P2.2
(A11)P2.3
(A12)P2.4
(A13)P2.5
(A14)P2.6
(A15)P2.7
VCC
GND
(RXD)P3.0
(TXD)P3.1
ALE/PROG
PSEN
U2
DS1302
GND
RST
X2
I/O
X1
SCLK
NC
VCC
1302 RST
1302 IO
1302 CLK
Y2
32768
C6
20p
C7
20p
BT1
Battery
BEEP
R29
10K
Q13
8550
R27
47
LS1
Speaker
Q1
8550
Q6
8550
Q7
8550
Q8
8550
Q9
8550
Q10
8550
Q11
8550
Q12
8550
R5
R11
R13
R15
R17
R19
R25
R30
R6
R12
R14
R16
R18
R20
R26
R31
Bit0
Bit1
Bit2
Bit3
Bit4
Bit5
Bit6
Bit7
D1
D2
D3
D4
D5
D6
D7
D8
D9
D10
D11
D12
D13
D14
D15
D16
D17
D18
D19
D20
D21
D22
D23
D24
D25
D26
D27
D28
D29
D30
D31
D32
D33
D34
D35
D36
D37
D38
D39
D40
D41
D42
D43
D44
D45
D46
D47
D48
D49
D50
D51
D52
D53
D54
D55
D56
D57
D58
D59
D60
LED1
LED2
LED3
LED4
LED5
LED6
LED7
LED8
LED9
LED10
LED11
LED12
LED13
LED14
LED15
LED16
X0
X1
X2
X3
X4
X5
X6
X7
EC1204B V1.1 Sch
Ver: 1.1
Date:2014.03.25